ZERTIFIKAT

SKZ

Certificate

SKZ - Testing GmbH awards the company stated below the right to use the SKZ - testing and inspection mark

User of the SKZ - mark

MGS Europe GmbH
Brüsseler Allee 21c
41812 Erkelenz
Germany

GEPRÜFT SKZ ÜBERWACHT

A 461

Date of initial certification

10 October 2007

Date of expiry

13. September 2020

Manufacturer

System: *---*

Probe: *Prospex gGmbH*

Pipes: *Kabelwerke Eupen*

Probe feet: *MGS Europe GmbH*

Fittings: *---*

Connecting parts:

Distributor:

Test guidelines

SKZ *specification for tests and inspection*
HR 3.26: 2015-01

Product

Geothermal probes made of polyethylene, PE 100, for geothermal products

∅ 25, ∅ 32, ∅ 40 mm

consisting of pipes and probe feet
made of PE 100, welded in the production plant

SKZ - Testing GmbH SKZ international akkreditiert

Würzburg, 14. September 2015

i. V.

Certification Body

The use of the SKZ-mark implies the obligation that with regard to production and testing of the products the General Business Terms and Conditions of SKZ - TeConA GmbH are observed. The original language of this certificate is German. In case of doubt the German version is obligatory.

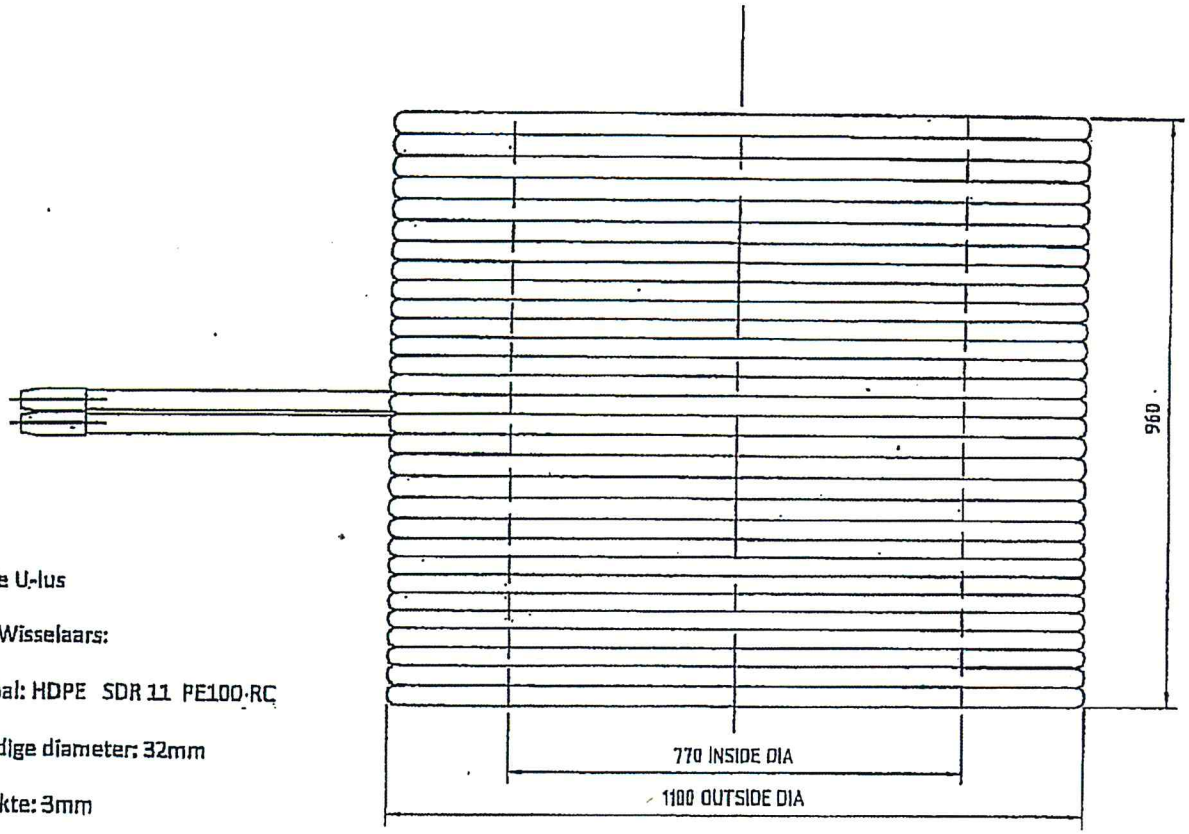

Dubbele U-lus

Lengte Wisselaars:

Materiaal: HDPE SDR 11 PE100-RC

Uitwendige diameter: 32mm

Wanddikte: 3mm

Kleur: zwart

BEO-veld

Putboringen Verheyden

RevNo	Revision note	Date	Signature	Checked
5				
4				
3				
2	NOTES ADDED	FEB 12	SKH	SKH
1	1st issue	FEB 12	SKH	SKH

Third angle projection | Do not scale

Remove all burrs and sharp edges

This drawing is confidential and copyright property of Marlon Geotechnical Services Ltd (MGS) and must not be copied or lent without express written permission

No dec +-1mm
1 dec +-0.1mm
2 dec +-0.05mm
Angular

MATL: SEE ABOVE. | FINISH: -

Designed by NGI MAY-05 | Checked by NGI MAY-05 | Approved by GIGH MAY-05 | Filename MGS xxx | Scale HTS

MGS Marlon Geotechnical Services Ltd
Rougham Ind Estate
Rougham, Bury St Edmunds
Suffolk IP30 0ND Tel +44 (0)1359 271167

TITLE. DOUBLE COIL (32mm)

DRG No M0489E | Sheet 1 of 2

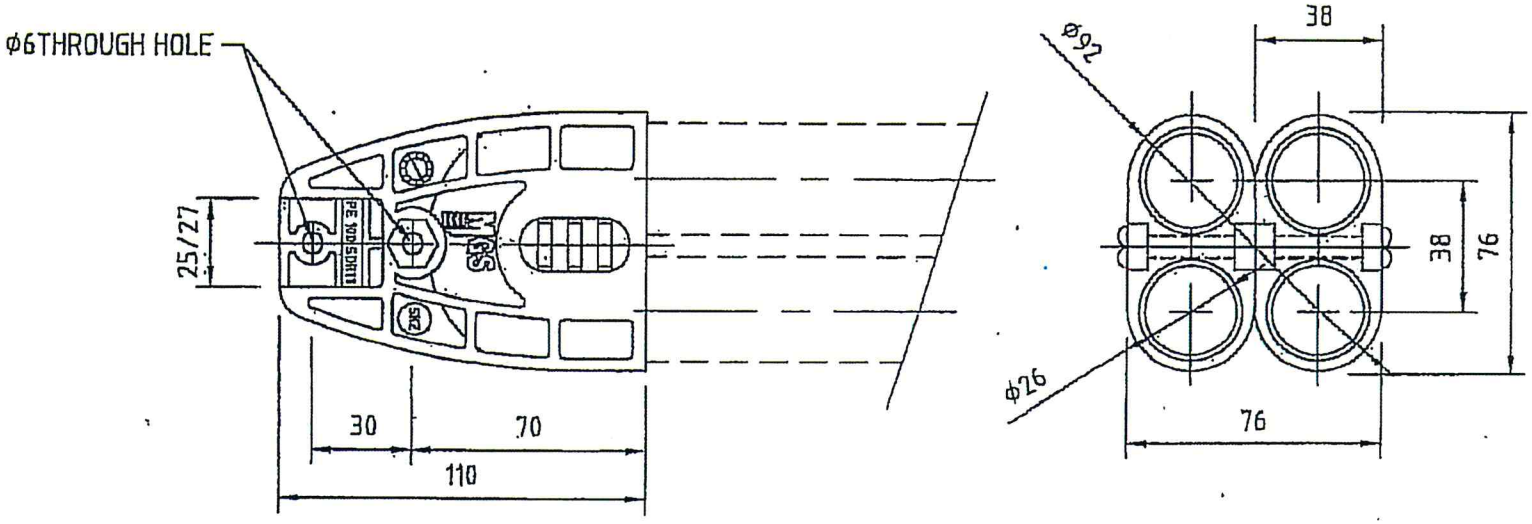

Bodemwarmtewisselaar

U-verbindingen

Materiaal: PE100 SDR 11

BEO-veld

Putborlingen Verheyden

Rev No	Revision note	Date	Signature	Checked
1	1st issue	FEB11	SKH	SKH

Third angle projection | Do not scale

Remove all burrs and sharp edges

This drawing is confidential and copyright property of Marton Geotechnical Services Ltd (MGS) and must not be copied or lent without express written permission

No dec +- 1mm
1 dec +- 0.1mm
2 dec +- .05mm
Angular

MATL PE100 | FINISH BLACK

Designed by NK MAY-00 | Checked by NK MAY-00 | Approved by SKH MAY-00 | Filename MGS xxx | Scale NTS

MGS Marton Geotechnical Services Ltd
Rougham Ind. Estate
Rougham, Bury St Edmunds
Suffolk IP30 9ND Tel +44 (0)1359 271107

TITLE: PROBE FOOT (MOULDED) 32mm DOUBLE

DRG No: M0489 - D | Sheet 1 of 2